A PRODUCT SHEET OF NEPTUNE TECHNOLOGY GROUP

T-10 Meter

SIZES ⅝", ¾", AND 1"

Every T-10® water meter meets or exceeds the latest AWWA C700 Standard. Its nutating disc, positive displacement principle has been time-proven for accuracy and dependability since 1892, ensuring maximum utility revenue.

Construction

The T-10 water meter consists of three major assemblies: a register, a lead free, high-copper alloy maincase, and a nutating disc measuring chamber.

The T-10 meter is available with a variety of register types. For reading convenience, the register can be mounted in one of four positions on the meter.

The corrosion-resistant maincase will withstand most service conditions; internal water pressure, rough handling, and in-line piping stress.

The innovative floating chamber design of the nutating disc measuring element is unaffected by meter position of in-line piping stresses while the unique chamber seal extends the low-flow accuracy by sealing the chamber outlet port to the maincase outlet port. The nutating disc measuring element utilizes corrosion-resistant materials throughout and a thrust roller to minimize wear.

Warranty

Neptune® provides a limited warranty for performance, materials, and workmanship. See warranty statement for details.

Guaranteed Systems Compatibility

All T-10 water meters are guaranteed adaptable to our ProRead™, AutoDetect, ProCoder™, E-CODER®, E-CODER®)R900*i*™, E-CODER®)R450*i*™, ProCoder™)R900*i*™, TRICON®/S, TRICON/E®3, and Neptune meter reading systems without removing the meter from service.

KEY FEATURES

REGISTER

- Magnetic-driven, low-torque registration ensures accuracy
- Impact-resistant register
- High-resolution, low-flow leak detection
- Bayonet-style register mount allows in-line serviceability
- Tamperproof seal pin deters theft
- Date of manufacture, size, and model stamped on dial face

LEAD FREE MAINCASE

- NSF/ANSI 372, NSF/ANSI 61
- Lifetime guarantee
- Resists internal pressure stresses and external damage
- Handles in-line piping variations and stresses
- Provides residual value vs. plastic or composite
- Electrical grounding continuity

NUTATING DISC MEASURING CHAMBER

- Positive displacement
- Widest effective flow range for maximum revenue
- Proprietary polymer materials maximize long-term accuracy
- Floating chamber design is unaffected by meter position or in-line piping stresses

Specifications

- NSF/ANSI 372, NSF/ANSI 61
- National Type Evaluation Program (NTEP) certification

Application

- Cold water measurement of flow in one direction in residential service applications

Maximum Operating Water Pressure

- 150 psi (1034 kPa)

Maximum Operating Water Temperature

- 80°F

Measuring Chamber

- Nutating disc technology design made from proprietary synthetic polymer

Options

Sizes

- ⅝", ⅝" x ¾"
- ¾", ¾" SL, ¾" x 1"
- 1", 1" x 1¼"

Units of Measure:

- U.S. gallons, imperial gallons, cubic feet, cubic metres

Register Types

- Direct reading: bronze box and cover (standard)

Remote Reading:

- ProRead, ProCoder, E-CODER, E-CODER)R900*i*, E-CODER)R450*i*, ProCoder™)R900*i*™, TRICON/S, TRICON/E3
- Reclaim

Bottom Caps

- Synthetic polymer (⅝" only)
- Cast iron
- Lead free, high-copper alloy

Connections

- Lead free, high-copper alloy, straight or bent

Environmental Conditions

- Operating temperature: +33° F to +149° F (0° C to +65° C)
- Storage temperature: +33° F to +158° F (0° C to +70° C)

⅝" ACCURACY

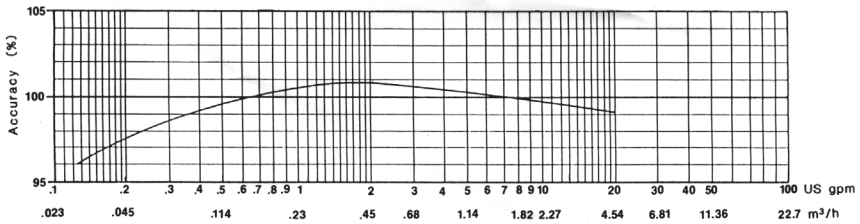

¾" ACCURACY

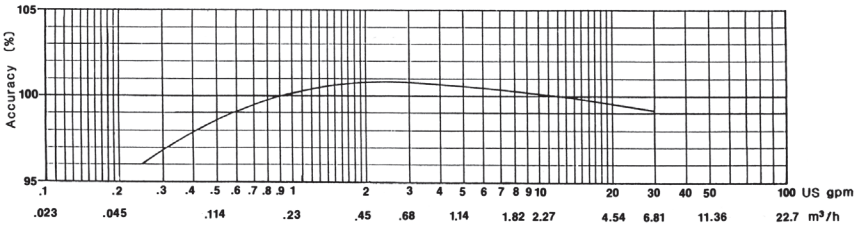

1" ACCURACY

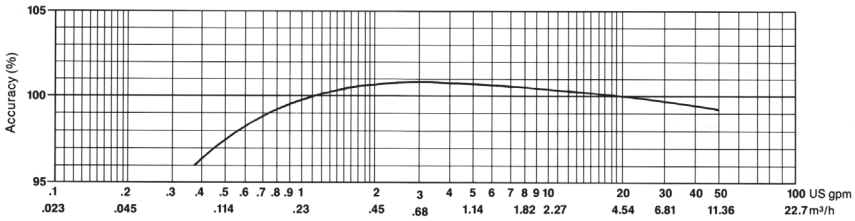

⅝" PRESSURE LOSS

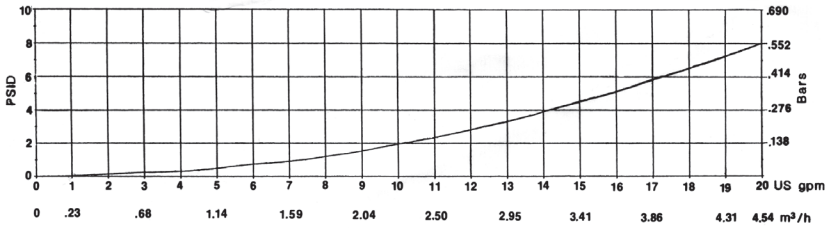

¾" PRESSURE LOSS

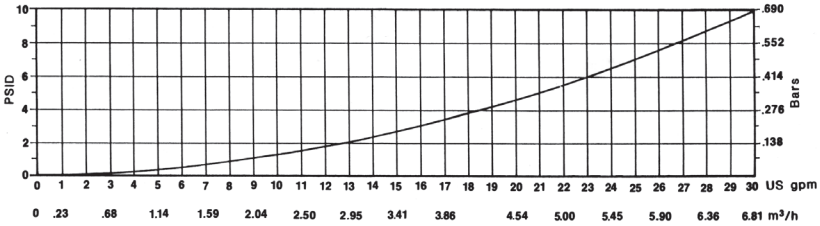

1" PRESSURE LOSS

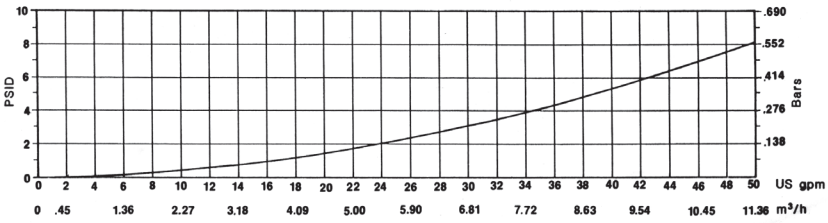

These charts show typical meter performance. Individual results may vary.

Dimensions

Meter Size	A	B	C					D-	E-	Weight lbs/kg
	in/ mm	in/ mm	Std. in/mm	ARB in/mm	ProCoder™ or E-CODER®	ProCoder™) R900*i*™ or ProCoder™) R450*i*™	E-CODER®) R900*i*™or E-CODER®) R450*i*™	NPSM Thread	in/ mm	
⅝″	7½ 191	3⅝ 92	4⅜ 111	5¼ 133	5¼ 133	5¼ 133	5¼ 133	¾″ - 14″	1½ 38	3¼ 1.4
⅝″ x ¾″	7½ 191	3⅝ 92	4⅜ 111	5¼ 133	5¼ 133	5¼ 133	5¼ 133	1″ - 11½″	1½ 38	3⅜ 1.5
Pre 2011 ⅝″	7½ 191	3⅝ 92	4⅞ 124	5½ 146	5½ 139	5½ 139	5½ 139	¾″ - 14″	1⅝ 41	3¾ 1.7
Pre 2011 ⅝″ x ¾″	7½ 191	3⅝ 92	4⅞ 124	5½ 146	5½ 139	5½ 139	5½ 139	1″ - 11½″	1⅝ 41	4 1.8
¾″	9 229	4⅜ 111	5½ 140	6¼ 159	6¼ 159	6¼ 159	6¼ 159	1″ - 11½″	1⅞ 48	6 2.7
¾″ SL	7½ 191	4⅜ 111	5½ 140	6¼ 159	6¼ 159	6¼ 159	6¼ 159	1″ - 11½″	1⅞ 48	5½ 2.5
¾″ x 1″	9 229	4⅜ 111	5½ 140	6¼ 159	6¼ 159	6¼ 159	6¼ 159	1¼″ - 11½″	1⅞ 48	6½ 2.9
1″	10¾ 273	6½ 165	6⅜ 162	7 178	7 178	7 178	7 178	1¼″ - 11½″	2⅛ 54	9¾ 4.4
1″ x 1¼″	10¾ 273	6½ 165	6⅜ 162	7 178	7 178	7 178	7 178	1½″ - 11½″	2⅛ 54	10¼ 4.6

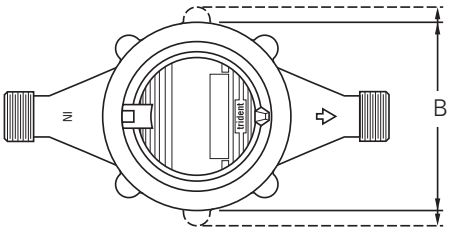

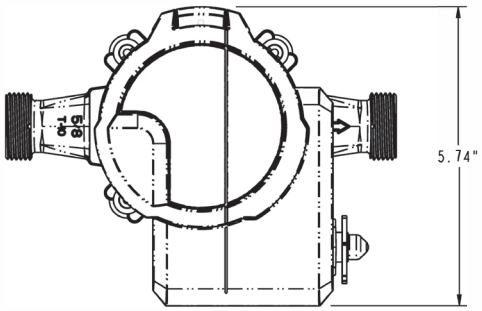

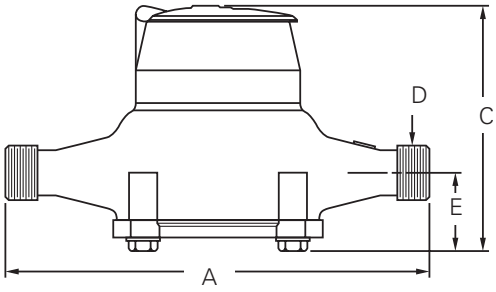

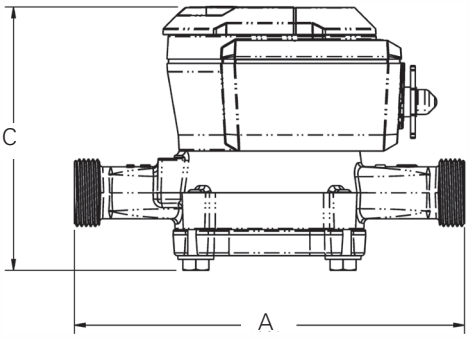

Operating Characteristics

Meter Size	Normal Operating Range @ 100% Accuracy (+/- 1.5%)	AWWA Standard	Low Flow @ 95% Accuracy
⅝"	½ to 20 US gpm 0.11 to 4.55 m^3/h	1 to 20 US gpm 0.23 to 4.5 m^3/h	⅛ US gpm 0.03 m^3/h
¾"	¾ to 30 US gpm 0.17 to 6.82 m^3/h	2 to 30 US gpm 0.45 to 6.8 m^3/h	¼ US gpm 0.06 m^3/h
1"	1 to 50 US gpm 0.23 to 11.36 m^3/h	3 to 50 US gpm 0.68 to 11.4 m^3/h	⅜ US gpm 0.09 m^3/h

Registration

ProRead Registration (per sweep hand revolution)		**⅝"**	**¾" & 1"**
10	US Gallons	√	√
10	Imperial Gallons	√	√
1	Cubic Foot	√	√
0.1	Cubic Metre	√	√
Register Capacity ProRead, ProCoder, and E-CODER		**⅝"**	**¾" & 1"**
10,000,000	US Gallons	√	√
10,000,000	Imperial Gallons	√	√
1,000,000	Cubic Feet	√	√
100,000	Cubic Metres	√	√
ProCoder and E-CODER High Resolution (8-digit reading)		**⅝"**	**¾" & 1"**
0.1	US Gallons	√	√
0.1	Imperial Gallons	√	√
0.01	Cubic Feet	√	√
0.001	Cubic Metres	√	√

Accu-Flo
1-800-921-2228
www.accuflo.com

NEPTUNE
TECHNOLOGY GROUP

© 2021 Neptune Technology Group Inc. All Rights Reserved. The trademarks, logos and service marks displayed in this document herein are the property of Neptune Technology Group Inc., its affiliates or other third parties. Availability and technical specifications are subject to change without notice. 21-006040 PS T10 SMALL 09.21

#winyourday
neptunetg.com

Neptune Technology Group
1600 Alabama Highway 229
Tallassee, AL 36078
800-633-8754 f 334-283-7293