NEPTUNE
TECHNOLOGY GROUP

Accu-Flo
1-800-921-2228
www.accuflo.com

R900® MIU Wall and Pit Installation and Maintenance Guide

R900® MIU Wall and Pit
Installation and Maintenance Guide

Copyright

This manual is an unpublished work and contains the trade secrets and confidential information of Neptune Technology Group Inc., which are not to be divulged to third parties and may not be reproduced or transmitted in whole or part, in any form or by any means, electronic or mechanical for any purpose, without the express written permission of Neptune Technology Group Inc. All rights to designs or inventions disclosed herein, including the right to manufacture, are reserved to Neptune Technology Group Inc.

The information contained in this document is subject to change without notice. Neptune reserves the right to change the product specifications at any time without incurring any obligations.

Trademarks used in this manual R900, ARB, ProRead, and E-CODER are registered trademarks of Neptune Technology Group Inc. Other brands or product names are the trademarks or registered trademarks of their respective holders.

FCC Notice

This device complies with Part 15 of the FCC Rules. Operation is subject to the following two conditions: (1) this device may not cause harmful interference, and (2) this device must accept any interference received, including interference that may cause undesired operation.

NOTE: This equipment has been tested and found to comply with the limits for a Class B digital device, pursuant to Part 15 of the FCC Rules. These limits are designed to provide reasonable protection against harmful interference in a residential installation. This equipment generates, uses, and can radiate radio frequency energy and, if not installed and used in accordance with the instructions, may cause harmful interference to radio communications. However, there is no guarantee that interference will not occur in a particular installation. If this equipment does cause harmful interference to radio or television reception, which can be determined by turning the equipment off and on, the user is encouraged to try to correct the interference by one or more of the following measures:

- Reorient or relocate the receiving antenna.
- Increase the separation between the equipment and receiver.
- Connect the equipment into an outlet on a circuit different from that to which the receiver is connected.
- Consult the dealer or an experienced radio / TV technician for help.

RF Exposure Information

This equipment complies with the FCC RF radiation requirements for uncontrolled environments. To maintain compliance with these requirements, the antenna and any radiating elements should be installed to ensure that a minimum separation distance of 20 cm is maintained from the general population.

Professional Installation

In accordance with section 15.203 of the FCC rules and regulations, the MIU must be professionally installed by trained meter installers.

Changes or modifications not expressly approved by the party responsible for compliance could void the user's authority to operate the equipment.

Industry Canada (IC) Statements

Section 8.4 of RSS-GEN

This device complies with Industry Canada License-exempt RSS standard(s). Operation is subject to the following two conditions:

- This device may not cause harmful interference.
- This device must accept any interference received, including interference that may cause undesired operation.

.Cet appareil est conforme aux normes RSS exonérées de licence d'Industrie Canada. L'opération est soumise aux deux conditions suivantes: 1) cet appareil ne doit pas provoquer d'interférence, et 2) cet appareil doit accepter toute interférence, y compris les interférences pouvant entraîner un fonctionnement indésirable de l'appareil.

Section 8.3 of RSS-GEN

Under Industry Canada regulations, this radio transmitter may only operate using an antenna of a type and maximum (or lesser) gain approved for the transmitter by Industry Canada. To reduce potential radio interference to other users, the antenna type and its gain should be so chosen that the equivalent isotropically radiated power (e.i.r.p.) is not more than that necessary for successful communication.

This radio transmitter IC: 4171B-L900M has been approved by Industry Canada to operate with the antenna types listed below with the maximum permissible gain and required antenna impedance for each antenna type indicated. Antenna types not included in this list, having a gain greater than the maximum gain indicated for that type, are strictly prohibited for use with this device.

- Maximum permissible gain of +1 dBi and required impedance of 75 ohm.
- Approved Antenna type(s).
    - R900® Pit Antenna, part number 12527-XXX
    - High Gain R900® Pit Antenna, part number 13586-XXX
    - R900® Wall Antenna, part number 13717-000
    - Wire monopole, part number 12641-XXX

En vertu de la réglementation d'Industrie Canada, cet émetteur radio ne peut fonctionner qu'avec une antenne d'un type et un gain maximal (ou inférieur) approuvé pour l'émetteur par Industrie Canada. Pour réduire les interférences radio potentielles avec d'autres utilisateurs, le type d'antenne et son gain devraient être choisis de manière à ce que la puissance rayonnée isotropiquement équivalente (e.i.r.p.) ne soit pas supérieure à celle nécessaire à une communication.

Cet Cet émetteur radio IC: 4171B-L900M a été approuvé par Industrie Canada pour fonctionner avec les types d'antennes énumérés ci-dessous avec le gain maximal admissible et l'impédance d'antenne requise pour chaque type d'antenne indiqué. Les types d'antenne non inclus dans cette liste, ayant un gain supérieur au gain maximal indiqué pour ce type, sont strictement interdits pour être utilisés avec ce périphérique.

- Gain maximal admissible de +1 dBi et impédance requise de 75 ohms.
- Type.(s) d'antenne approuvé
    - Antenne de puits R900®, numéro de pièce 12527-XXX
    - Antenne de puits à gain élevé R900®, référence 13586-XXX
    - Antenne murale R900®, numéro d'article 13717-00
    - Fil monopôle, numéro d'article 12641-XXX

R900® Wall and Pit MIU Installation and Maintenance Guide
Literature No. IM R900 MIU 01.19
Part No. 12560-001

Neptune Technology Group Inc.
1600 Alabama Highway 229
Tallassee, AL 36078
Tel: (800) 633-8754
Fax: (334) 283-7293

Copyright © 2006 - 2019
Neptune Technology Group Inc.

All Rights Reserved.

Contents

Chapter 1: Product Description *1*

R900® MIU Programming 2

Chapter 2: Specifications *3*

Electrical Specifications 3

Transmitter Specifications 3

Encoder Register Interface 4

Specifications - R900® Pit MIU 4

Environmental Conditions 4

Functional Specifications 5

Dimensions and Weight 5

Specifications - R900® Wall MIU 6

Environmental Conditions 6

Functional Specifications 6

Dimensions and Weight 7

Chapter 3: General Installation Guidelines *9*

Tools and Materials 9

Safety and Preliminary Checks 10

Verifying and Preparing the Encoder Register 10

Install a Register (Non Pre-Wired or Potted Only) 11

Chapter 4: Wall Installation *15*

Prior to Installation 15

Storage 15

Unpacking 15

Tools and Materials 15

Site Selection 16

Installing the R900® Wall MIU 17

Removing the Main Housing 17

Applying the Scotchlok™ Connectors 18

Activating and Completing the Installation 20
Testing the Installation 21
Chapter 5: Pit Installation 23
Prior to Installation 23
Storage 23
Unpacking 23
Tools and Materials 23
Site Selection 24
Pit MIU Installation 26
Installing the Antenna 26
Begin the Installation 28
Installing the Scotchlock™ Connectors 29
Connecting the Splice Tube 32
Tying the Cable and Activating the MIU 33
Testing the Installation 35
Chapter 6: Data Logging Extraction 37
Pairing with the Belt Clip Transceiver (BCT) 37
Accessing Data Logging 38
Initializing the Data Logger 40
Initiating RF-Activated Data Logging 42
Sample Data Logging Graph 44
Off Cycle Data Extraction 45
Chapter 7: Maintenance and Troubleshooting 47
Six-Wheel Encoder Normal Operation 47
Four-Wheel Encoder Normal Operation 47
Troubleshooting 47
Replacement Parts 48
Contact Information 48
By Phone 48
By Fax 49

By Email 49

Glossary *51*

Index *53*

This page intentionally left blank.

Figures

Figure 1 – Wall MIU 1
Figure 2 – Pit MIU 1
Figure 3 – Pit MIU Dimensions - Diagram 1 5
Figure 4 – Pit MIU Dimensions - Diagram 2 6
Figure 5 – Pit MIU Antenna 6
Figure 6 – Wall MIU Dimensions - Front 7
Figure 7 – Wall MIU Dimensions - Side 7
Figure 8 – Wiring a Neptune® Encoder Register 11
Figure 9 – MIU Color Code for Wires 11
Figure 10 – Cable Threaded around Strain Relief Posts 12
Figure 11 – Apply the Sealant 12
Figure 12 – Covering the Terminal Screws 13
Figure 13 – Wall MIU Main Housing 17
Figure 14 – Mounting Adapter 18
Figure 15 – Gel Cap Connections 18
Figure 16 – Cable in Back of Mounting Adapter 19
Figure 17 – Securing the Mounting Adapter 20
Figure 18 – Activating the MIU 20
Figure 19 – Install Seal Wire 22
Figure 20 – Antenna Placement for Low Traffic Areas 24
Figure 21 – Antenna Placement for High Traffic Areas 25
Figure 22 – Inserting Antenna into Pit Lid 26
Figure 23 – Locking Nut on Antenna 26
Figure 24 – Securing the Locking Nut 27
Figure 25 – Installation Complete 27
Figure 26 – MIU Housing and Latch Plate 28
Figure 27 – Aligning the Connector to the Housing 28

Figure 28 – 3M Scotchlok™ Connector 29
Figure 29 – MIU Color Code for Wires 30
Figure 30 – Seating Connector Wires 30
Figure 31 – Crimping Tool 31
Figure 32 – Improper Connections 31
Figure 33 – Three Color Wires Connected 32
Figure 34 – Splice Tube 32
Figure 35 – Gray Wire in Slots 33
Figure 36 – Cover in Place 33
Figure 37 – Attaching the MIU to the Antenna Shaft 34
Figure 38 – Activating the MIU 34
Figure 39 – HHU Home Screen 38
Figure 40 – N_SIGHT® R900® Menu Screen 38
Figure 41 – Data Logger Option 39
Figure 42 – Reader ID Input 39
Figure 43 – HHU Time Confirmation 40
Figure 44 – Initialize RF Device 40
Figure 45 – MIU ID Entry 41
Figure 46 – Capture Button 41
Figure 47 – Meter Size Selection 42
Figure 48 – Start Button 42
Figure 49 – Listening for Data 43
Figure 50 – Receiving Data 43
Figure 51 – Graph Button 44
Figure 52 – Data Logging Graph Examples 44
Figure 53 – HHU Home Screen 45
Figure 54 – HHU Menu 46
Figure 55 – Off Cycle Option 46

Tables

Table 1 – Transmitter Specifications 3
Table 2 – Maximum Cable Lengths 4
Table 3 – Environmental Conditions – Pit MIU 4
Table 4 – Functional Specifications – Pit MIU 5
Table 5 – Dimensions and Weight Specifications – Pit MIU 5
Table 6 – Dimensions and Weight Specifications – Wall MIU 7
Table 7 – Recommended Tools and Materials 9
Table 8 – Cable Lengths and Manufacturers for Wall Installation 16
Table 9 – Cable Lengths and Manufacturers for Pit Installation 25
Table 10 – Data Logging Graph Legend 45
Table 11 – Example Reading Values 47
Table 12 – Available Replacement Parts 48

This page intentionally left blank.

Chapter 1: Product Description

This chapter provides a general description of the R900® Wall and Pit Meter Interface Unit (MIU).

The R900 MIU is a compact electronic device that collects meter reading data from an encoder register. It then transmits the data for collection by the meter reader. The unit is easily installed and operates within a radio frequency (RF) bandwidth which does not require an operating license. The R900 MIU can be mounted as far as 500 feet from the encoder register and optimum broadcast signal strength is obtainable, ensuring a high percentage of accurate, one-pass readings.

Figure 1 – Wall MIU

Figure 2 – Pit MIU

The R900 MIU meets FCC regulations Part 15.247, allowing higher output power and greater range. The R900 MIU uses frequency-hopping, spread-spectrum technology to avoid RF interference and enhanced security. The MIU reads the encoder registers at 15-minute intervals and transmits a mobile message every 14-20 seconds that includes the meter reading data and the unique MIU ID. This allows the meter to be read by a Hand-Held Unit (HHU) or mobile data collection unit. The MIU also transmits a high-power fixed network message every seven and one-half minutes on an interleaved basis to an R900® Gateway. If connected to a LoRa® network, the R900 MIU can also transmit time-synchronized hourly readings every three hours on an interleaved basis, to a LoRa network.

The R900 MIU is designed to offer advantages to utility organizations of all sizes:

- Increases meter reading accuracy
- Eliminates hard-to-read meters
- Protects utility liability by increasing meter reader safety

R900® MIU Programming

The MIU does NOT require field programming.

Chapter 2: Specifications

This chapter contains the specifications for the R900® Meter Interface Unit (MIU).

Electrical Specifications

A lithium battery supplies the power for the MIU.

Transmitter Specifications

The following table defines the transmitter specifications for the MIU.

Table 1 – Transmitter Specifications

Specification	Definition
Transmit Period	• Every 14-20 seconds – standard mobile message • Every seven and one-half minutes – standard, high-power, fixed network message • Every three hours – standard LoRa® high-power, fixed network message
Encoder Reading	Register interrogated every 15 minutes
Transmitter Channels	• 50 (R900 mobile and fixed) • 64 (LoRa fixed network message)
Channel Frequency	902-928 MHz
Output Power	Meets Federal Communications Commission (FCC) Part 15.247
FCC Verification	Part 15.247

Encoder Register Interface

The following table defines the supported encoder maximum cable lengths.

Table 2 – Maximum Cable Lengths

Specification	Definition
Neptune ARB® V1	300 feet (91 meters). This meets the manufacturer's published specifications for wire length between the encoder and the remote receptacle. The length is based on solid three-conductor wire, 22 American Wire Gauge (AWG).
Neptune ProRead™ and E-CODER®	500 feet (152 meters)
Sensus Protocol registers	200 feet (61 meters)

Specifications - R900® Pit MIU

This section defines specifications for the pit MIU.

Environmental Conditions

The following table defines the environmental conditions for the pit MIU.

Table 3 – Environmental Conditions – Pit MIU

Condition	Definition
Operating Temperature	–22° to 149°F (–30° to 65°C)
Storage Temperature	–40° to 158°F (–40° to 70°C)
Operating Humidity	0 to 100% condensing

Functional Specifications

The following table defines the functional specifications for the pit MIU.

Table 4 – Functional Specifications – Pit MIU

Specification	Definition
Register Reading	Eight digits
MIU ID	9 or 10 digits

Dimensions and Weight

The following table defines the dimensions and weight for the pit MIU.

Table 5 – Dimensions and Weight Specifications – Pit MIU

Specification	Definition
Dimensions	See "Pit MIU Dimensions - Diagram 1" below, "Pit MIU Dimensions - Diagram 2" on the next page, and "Pit MIU Antenna" on the next page
Weight	1.0 lbs. (454 grams)

Figure 3 – Pit MIU Dimensions - Diagram 1

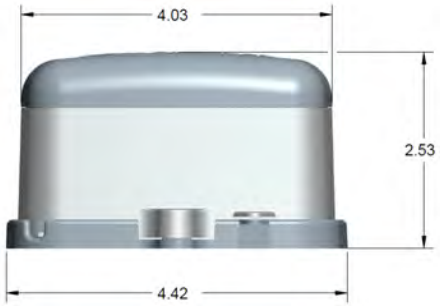

Figure 4 – Pit MIU Dimensions - Diagram 2

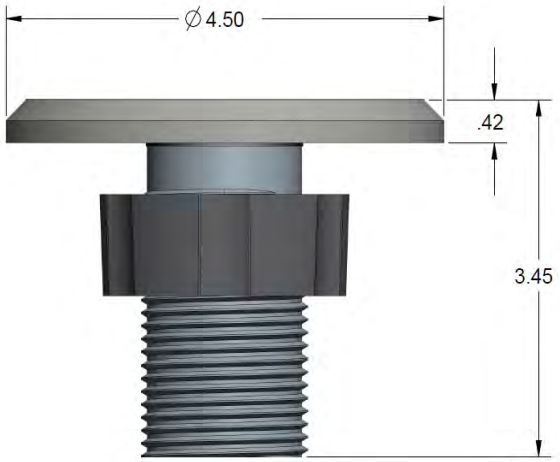

Figure 5 – Pit MIU Antenna

Specifications - R900® Wall MIU

This section defines specifications for the wall MIU.

Environmental Conditions

The environmental conditions for the wall MIU are the same as for the pit MIU. See "Environmental Conditions" on page 4.

Functional Specifications

The functional conditions for the wall MIU are the same as for the pit MIU. See "Specifications" on page 3.

Dimensions and Weight

The following table defines the dimensions and weight for the wall MIU.

Table 6 – Dimensions and Weight Specifications – Wall MIU

Specification	Definition
Dimensions	See "Wall MIU Dimensions - Front" and "Wall MIU Dimensions - Side" below.
Weight	1.0 lbs. (454 grams)

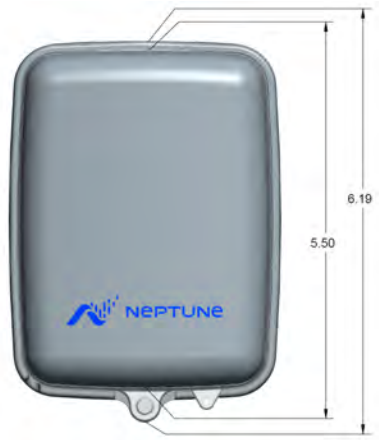

Figure 6 – Wall MIU Dimensions - Front

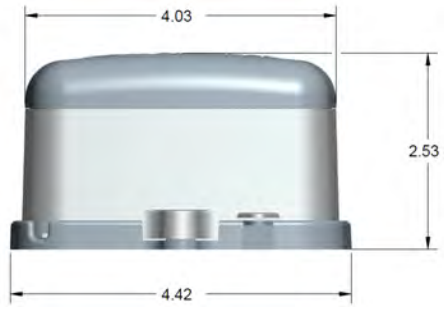

Figure 7 – Wall MIU Dimensions - Side

This page intentionally left blank.

Chapter 3: General Installation Guidelines

This chapter describes tools, materials, and general installation information for the R900® Meter Interface Unit (MIU).

Tools and Materials

The following table shows the recommended tools and materials you need to successfully install the R900 MIU.

Some items do not apply to your specific installation, or the list may not contain all required tools or materials.

Table 7 – Recommended Tools and Materials

Item	Description / Recommendations	Use
Tool Kit	Contains standard tools including: • Assorted screwdrivers • Needle-nose pliers • Wire stripper • Diagonal cutters • Electrician's knife • Hammer • Crimping tool Part # 5500-158	Perform various installation procedures
Magnet	6 lb. force Part # 12287-001	Activate the MIU
Cable	Solid three-wire conductor #22 American Wire Gauge (AWG) (black / green / red) Part # 6431-352	Connect the MIU to the encoder register
Moisture Protection Compound	Novaguard sealant part # 96018-072	Cover exposed wires and terminal screws on register and MIU
Scotchlok™ Connectors	Part # 8138-125	Connect wall MIU or replacement pit MIU to encoder register
Site Work Order	Your utility provides this documentation	Receive and record information about the work site

Safety and Preliminary Checks

Observe the following safety and preliminary checks before and during each installation:

- Verify that you are at the location specified on the site work order.
- Verify that the site is safe for you and your equipment.
- Notify the customer of your presence and tell the customer that you need access to the water meter.
- If the site work order does not have an MIU ID number on it, write in the ID number of the MIU you are about to install. If the site work order already has an MIU ID number on it, verify that it matches the ID number on the MIU you are about to install.

Verifying and Preparing the Encoder Register

The R900 MIU is designed for use with the following encoder registers:

- ARB® V
- ProRead™
- ProRead AutoDetect
- E-CODER®
- ProCoder™
- Competitor registers using Sensus include:
    - Sensus ECRII
    - ICE
    - iPerl
    - OMNI and electronic register
    - Hersey / Mueller Translator
    - Badger ADE
    - HR E|LCD

Before installing an MIU, the encoder register must be correctly wired and programmed to work with the MIU. E-CODER registers do not require programming.

When you use a ProRead encoder register, the non-AutoDetect ProRead register must be programmed for three-wire mode.

If connecting the MIU to a new ProRead encoder register, or if a three-conductor cable is already connected to a ProRead encoder register, ensure that the ProRead register is programmed for three-wire mode using the ProRead programmer and its RF / MIU 6, 8, or 10ID TDI format. You can do this through the ProRead receptacle before removing the receptacle.

Install a Register (Non Pre-Wired or Potted Only)

Follow these steps to install a non pre-wired or potted register.

1. Before wiring the pit encoder register, make sure the cable is long enough. When you complete the installation, you can remove the pit lid easily without straining the cable. Use only 22 AWG cable to make the connection from the encoder register to the MIU.
2. Remove the terminal screw cover from the encoder register.
3. Strip 3/4 inch of jacket from the cable, leaving only the three insulated wires.
4. Take precautions not to nick or cut the insulation on the three wires and strip 1/2 inch of insulation from each of the three wires.

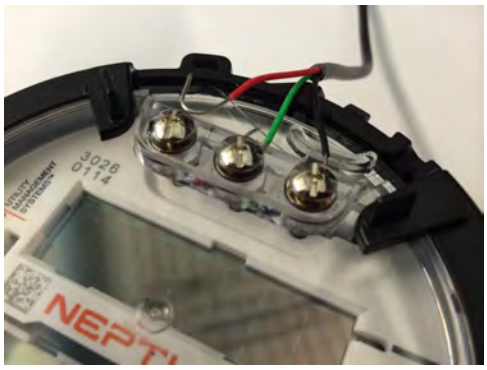

Figure 8 – Wiring a Neptune® Encoder Register

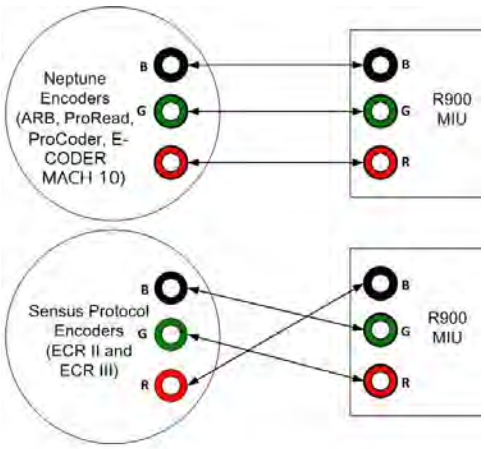

Figure 9 – MIU Color Code for Wires

5. If required, connect the three conductor wires to the encoder register's terminals using the manufacturer's instructions. See "Wiring a Neptune® Encoder Register" on the previous pageand "MIU Color Code for Wires" on the previous page.
6. Thread the cable around the strain relief posts of the encoder.

Figure 10 – Cable Threaded around Strain Relief Posts

7. Apply sealant liberally and ensure that it encapsulates the terminal screws and exposed wires.

Figure 11 – Apply the Sealant

Neptune requires Novaguard G661 sealant or Dow Corning compound 4. Any leak point can cause a reading failure in a submerged meter setting.

8. Snap the cover onto the encoder register.

Figure 12 – Covering the Terminal Screws

9. Run the cable to the MIU and fasten it securely.

Do not exceed maximum cable lengths as defined in "Encoder Register Interface" on page 4. If the encoder register is pre-wired and potted, use Scotchloks for connecting the register to the MIU.

This page intentionally left blank.

Chapter 4: Wall Installation

This chapter describes storage and unpacking instructions, preliminary tests, tools, materials, site selection, and wall installation for the R900® Meter Interface Unit (MIU).

Prior to Installation

Any existing network registers must be reprogrammed.

The R900 MIU cannot be networked.

Storage

After receipt, inspect the shipping containers for damage, and inspect the contents of any damaged cartons prior to storage.

After you inspect the cartons, store them in a clean, dry environment. The R900 MIU has an internal battery and storing it for more than one year may affect product life. Use a first-in first-out inventory control system. See "Environmental Conditions" on page 4.

Unpacking

Handle the R900 MIU carefully; however, no additional special handling is required. After unpacking the MIU, inspect for damage. If the MIU appears to be damaged or proves to be defective upon installation, notify your Neptune Sales Representative. If one or more items require reshipment, use the original cardboard box and packing material.

Tools and Materials

Tables 1 and 2 in the "Specifications" section show the recommended tools and materials you need to successfully install the R900 MIU.

Some items may not apply to your specific installation, or the list may not contain all required tools or materials.

Site Selection

Always follow your company's safety practices and installation guidelines when installing an MIU. Never perform an installation during a lightning storm or under excessively wet conditions.

Installation and operation in moderate temperatures increase reliability and product life. See "Environmental Conditions" on page 4.

Follow these guidelines when selecting a location to install the R900 MIU:

- Install the MIU approximately 5 feet above the ground
- Mount on the outside of the building and in a location that provides a direct line-of-sight to the path of the meter reading device.
- Install the MIU in a vertical and upright position. The preferred mounting surface for the MIU is a flat wall, but you can also mount it to a pipe.
- Ensure the location is clear of all obstructions. Do not install behind metal fences or walls.

The maximum cable length between the encoder register and MIU depends on the register's manufacturer and model. See the following table for maximum cable lengths.

Table 8 – Cable Lengths and Manufacturers for Wall Installation

Encoder Register	Maximum Cable Lengths
Neptune ARB® V	300 feet (91 meters) This meets the manufacturer's published specification for wire length between encoder and remote receptacle.
Neptune ProRead™, ProCoder™, E-CODER®	500 feet (152 meters)
Sensus Protocol registers	200 feet (61 meters)

Installing the R900® Wall MIU

Follow the steps in this section to install the R900 Wall MIU.

Removing the Main Housing

Complete these steps to remove the MIU main housing.

1. Remove the main housing from the mounting adapter.

> The Hi-Lo fastener for securing the main MIU housing to the adapter plate ships separately.

Figure 13 – Wall MIU Main Housing

2. Study Figure 14 – Mounting Adapter and the location requirements, then decide how to install the MIU and mount the adapter with the set screw positioned at the bottom:
   - The cable enters through the bottom or rear cable entry of the mounting adapter. A variety of holes in the mounting adapter allows for quick and easy installation.
   - When the MIU replaces a receptacle, use the appropriate holes to allow reuse of the receptacle's original mounting holes.
   - When mounting the MIU to a pipe, use the bolt hole to bolt the mounting adapter to a pipe clamp.

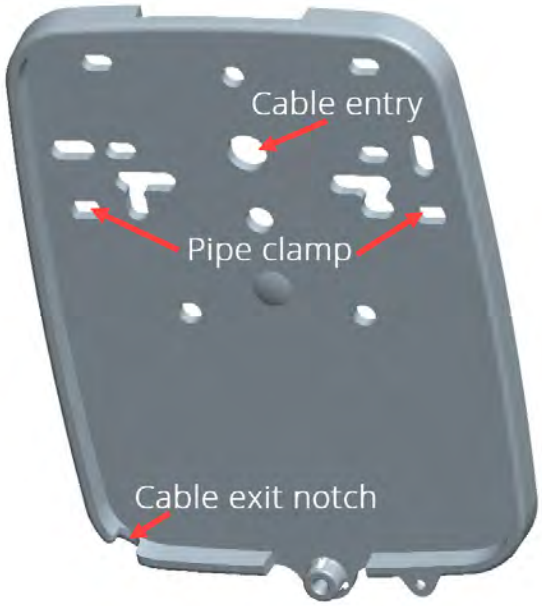

Figure 14 – Mounting Adapter

Applying the Scotchlok™ Connectors

Follow the steps to apply the Scotchlok™ connectors.

1. Using Scotchlok gel caps, connect the register wires to the pigtail from the MIU.

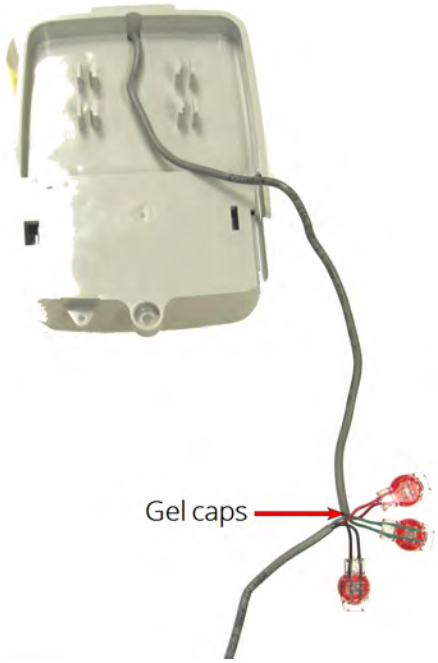

Figure 15 – Gel Cap Connections

2. Pair the wires according to the following color diagram.

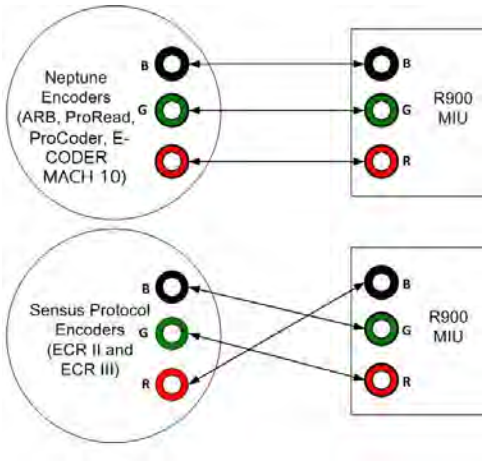

3. Slide the paired wires into the grooves provided until they seat into the back of the gel cap.
4. Using an appropriate crimping tool, firmly squeeze the gel cap to ensure a good connection.
5. Repeat steps 1 through 4 until all connections are complete.
6. For rear cable entry, store excess wire and Scotchloks in the hollow cavity in the back of the MIU using the strain relief guides as shown in the following figure.

Figure 16 – Cable in Back of Mounting Adapter

7. Continue to guide the remaining wire through the cable exit notch at the bottom right side of the MIU as shown in the previous figure.

Activating and Completing the Installation

Install and activate the MIU.

1. Slide the tongue on the top of the MIU into the groove on the top of the mounting adapter.
2. Secure the MIU to the mounting adapter using the set screw.

Figure 17 – Securing the Mounting Adapter

3. Position the magnet against the left side of the MIU and swipe it bringing it from the side and around the corner to the top to activate the MIU.

Figure 18 – Activating the MIU

Testing the Installation

Complete the following steps to test the installation.

1. Power up the Hand-Held Unit (HHU) test device and start the testing programs provided.

To avoid RF signal saturation of the HHU, do one of the following:
- Position yourself at least 2 to 3 feet from the MIU.
- Remove the antenna from the HHU.

When the MIU is installed correctly, its ID number and meter readings appear on the HHU display.

2. Verify the correct meter readings by comparing it to the meter's dial. See the following table for next steps.

If...	Then...
The readings are the same,	Proceed to "Data Logging Extraction" on page 37.
A meter reading does not appear on the HHU display, or the meter reading on the HHU display is not the same as the reading on the meter's dial,	• Reactivate the MIU using the magnet. • Verify all electrical connections. • Test the installation again.
You use a ProRead or ProCoder encoder register,	• Ensure the unit is programmed in three-wire mode. • Verify all electrical connections. • Reactivate the MIU. (See step 1). • If a problem still exists, contact your Neptune Sales Representative.

3. To complete the installation, install a seal wire or seal clip through the seal holes at the bottom of the main housing.

Figure 19 – Install Seal Wire

4. Verify that the requirements of the site work order have been met and that you have recorded all information.
5. Clean up the installation site before leaving.

Chapter 5: Pit Installation

This chapter provides instructions for:

- Storing and unpacking the MIU
- Performing preliminary tests
- Verifying tools and materials
- Selecting a site
- Installing the unit

Prior to Installation

This section defines preparations to take before you install the MIU.

Storage

After receipt, inspect all shipping containers for damage and inspect the contents of any damaged cartons prior to storage.

After you inspect the cartons, store them in a clean, dry environment. The R900® MIU has an internal battery and storing it for more than one year may affect product life. Use a first-in first-out inventory control system. See “Environmental Conditions” on page 4.

Unpacking

Handle the R900 MIU carefully; however, no additional special handling is required. After unpacking the MIU, inspect it for damage. If the MIU appears to be damaged or proves to be defective upon installation, notify your Neptune Sales Representative. If one or more items requires reshipment, use the original cardboard box and packing material.

Tools and Materials

See "Tools and Materials" on page 9 for the recommended tools and materials you need to successfully install the R900 MIU.

Some items may not apply to your specific installation, or the list may not contain all required tools or materials.

Site Selection

Always follow your company's safety practices and installation guidelines when installing an MIU. Never perform an installation during a lightning storm or under excessively wet conditions.

Installation and operation in moderate temperatures increase reliability and product life. See "Environmental Conditions" on page 4.

Follow these guidelines when selecting a location to install the R900 MIU:

- Select a location where there is no chance that another object can be set over the antenna.
- Avoid installing the MIU behind metal fences or walls.
- Make sure the pit location gives adequate room for installing both the MIU and the pit antenna.
- Install pit antennas above the lid as illustrated in "Antenna Placement for High Traffic Areas" on the facing page.

For maximum performance, locate the flange of the pit antenna above the pit lid.

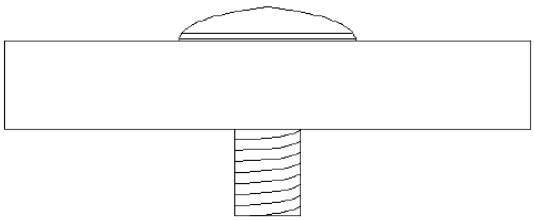

Figure 20 – Antenna Placement for Low Traffic Areas

When installing in a high traffic area, Neptune recommends that the dome of the antenna be recessed in the pit lid as shown in the following figure. However, recessing the antenna does reduce its range.

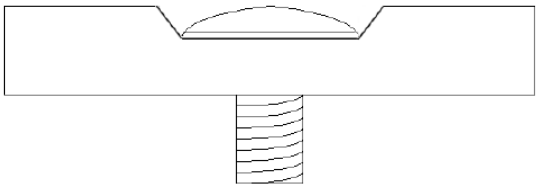

Figure 21 – Antenna Placement for High Traffic Areas

Table 9 – Cable Lengths and Manufacturers for Pit Installation

Encoder Register	Maximum Cable Length
Neptune ARB® V. Meets manufacturer's published specification for wire length between encoder and remote receptacle.	300 feet (91 meters)
Neptune ProRead™, E-CODER® and ProCoder™	500 feet (152 meters)
Sensus Protocol registers	200 feet (61 meters)

Pit MIU Installation

The following section describes how to install a single R900 MIU in a pit location.

Installing the Antenna

Follow the steps in this section to install the antenna for the pit MIU.

1. Select a location for the MIU that meets the recommendations in "Site Selection" on page 24.
2. Insert the antenna cable and housing through the 1-3/4 inch hole in the meter pit lid.

Figure 22 – Inserting Antenna into Pit Lid

3. Slip the large plastic nut over the antenna cable and thread it onto the antenna assembly.

Figure 23 – Locking Nut on Antenna

4. Hand tighten the nut securely to the lid.

Figure 24 – Securing the Locking Nut

The following figure shows the completed antenna installation.

Figure 25 – Installation Complete

Begin the Installation

Follow these steps to install the pit MIU.

1. Do one of the following. If you are:
   - Installing the antenna on a new MIU, remove the black plastic thread protector cap from the male F connector on the MIU.
   - Replacing an existing antenna, clean all dirt, debris, and dielectric grease from the latch plate on the MIU housing.

Figure 26 – MIU Housing and Latch Plate

2. Align the F connector center conductor and insert the antenna connector into the three-lobed plastic latch plate of the MIU housing.

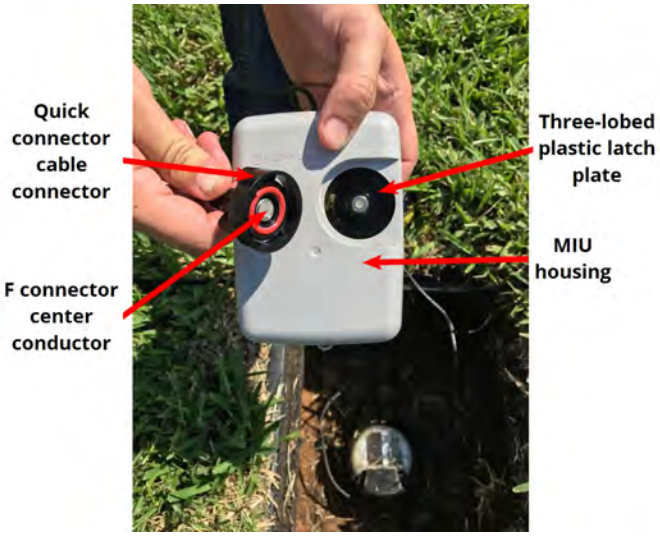

Figure 27 – Aligning the Connector to the Housing

3. Push in and turn the connector clockwise until it is properly seated on the three-lobed black plastic latch plate.

Installing the Scotchlok™ Connectors

Follow this procedure to install the 3M Scotchlok™ connectors.

1. Complete the steps outlined in "Pit MIU Installation" on page 26 to install the MIU through the lid.
2. Connect the MIU wires to the encoder wires using Scotchlok connectors.
3. Hold the connector between index finger and thumb with the red cap facing down.

Figure 28 – 3M Scotchlok™ Connector

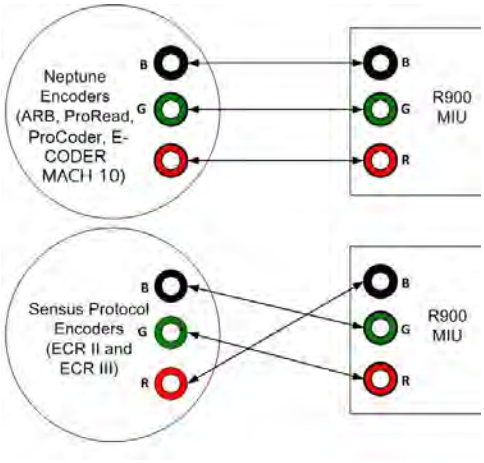

Figure 29 – MIU Color Code for Wires

4. Take a non-stripped black wire from the pigtail and a non-stripped black wire from the receptacle / MIU and insert the wires into the Scotchlok connector until fully seated in the connector.

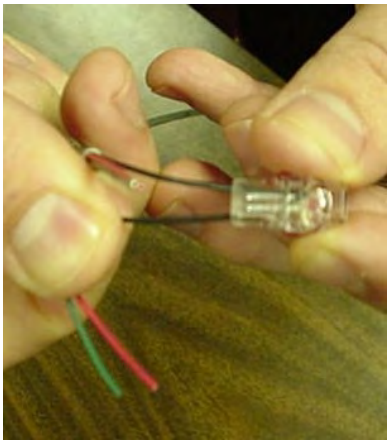

Figure 30 – Seating Connector Wires

Do not strip colored insulation from wires, or strip and twist bare wires prior to inserting in the connector. Insert the insulated colored wires directly into the Scotchlok connector.

5. Place the connector, red cap side down, between the jaws of the crimping tool.

Figure 31 – Crimping Tool

6. Check to ensure the wires are still fully seated in the connector before crimping the connector. The following figure illustrates improper connections due to wires not being fully seated.

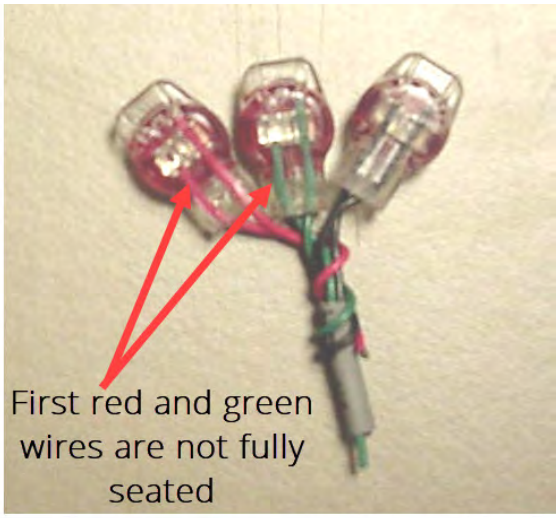

Figure 32 – Improper Connections

7. Squeeze the connector firmly with the proper crimping tool until you hear a pop and gel leaks out the end of the connector.
8. Repeat steps 2 through 4 for each color wire.

9. After you connect all three color wires, read the encoder register to ensure proper connections and functionality of the receptacle / MIU.

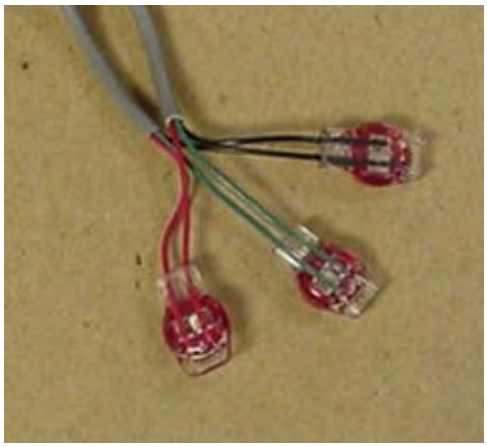

Figure 33 – Three Color Wires Connected

Connecting the Splice Tube

To finish the installation of the Scotchloks, complete the following steps to install the connector splice tube.

1. Push all three connected Scotchloks into the splice tube until they are fully encapsulated in the silicone grease.

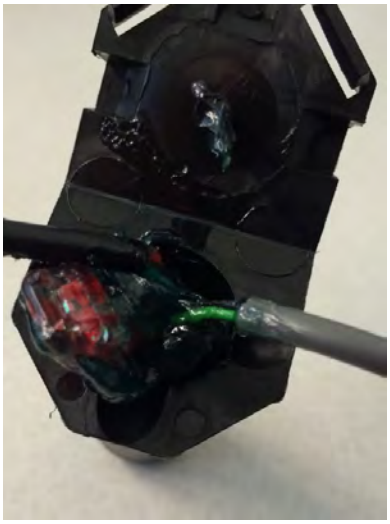

Figure 34 – Splice Tube

2. Separate each gray wire and place them in the slots on each side.

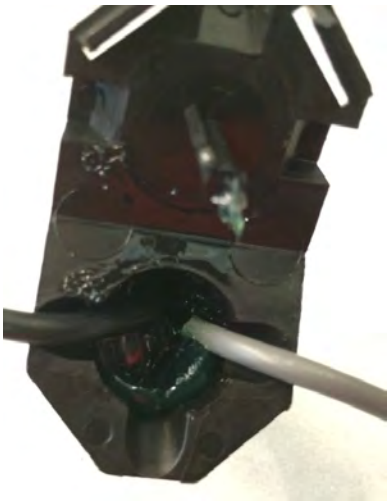

Figure 35 – Gray Wire in Slots

3. Snap the cover closed to finish the installation.

Figure 36 – Cover in Place

Tying the Cable and Activating the MIU

Complete this procedure to activate the MIU.

1. Follow these suggestions to place the MIU in the pit location:
   - In a shallow pit application, you can place the MIU beside the meter.

Be careful not to lodge the MIU between the meter box and any components inside the box.

   - In a deep pit application, use a cable tie to suspend the MIU from the antenna shaft.

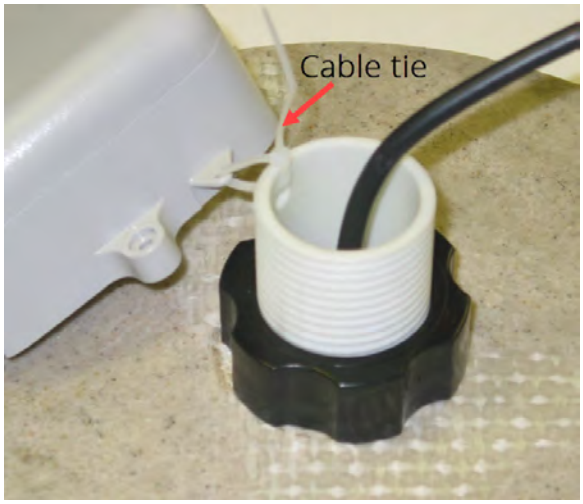

Figure 37 – Attaching the MIU to the Antenna Shaft

Make sure the MIU is placed in such a way that it does not lodge itself when the pit lid is removed.

2. After you place the MIU, position the magnet against the left side of the MIU as shown, and swipe it from the side and around the corner to the top to activate the MIU.

Figure 38 – Activating the MIU

Testing the Installation

If the R900 MIU is connected to an E-CODER register or another register with an eight-digit output, the R900 MIU transmits an eight-digit read. For example, read 12345678 (E-CODER or other eight-digit register output).

1. Power on the Hand-Held Unit (HHU) and enable the RF test mode.

To avoid RF signal saturation of the HHU, position yourself at least 2-3 feet from the MIU.

When the MIU is installed correctly, its ID numbers and meter readings appear on the HHU display.

2. Verify the correct meter readings by comparing it to the meter's dial. If the readings are the same, proceed to the next chapter.
3. If a meter reading does not appear on the HHU display, or the reading is not the same as the reading on the meter's dial, do one of the following:
   - Reactivate the MIU using the magnet.
   - Verify all electrical connections.
   - Verify registers are programmed correctly.
   - Test the installation again.
4. If the installation includes a ProRead encoder register:
   - Ensure the unit is programmed in three-wire mode.
   - Verify all electrical connections.
   - Reactivate the MIU (see step 1).

   If a problem still exists, contact your Neptune Sales Representative.

This page intentionally left blank.

Chapter 6: Data Logging Extraction

The R900 MIU can store interval data for data logging. The R900® MIU is activated using the Trimble® Nomad® and R900® Belt Clip Transceiver (BCT) and is explained in more detail in the following section.

The R900 MIU stores consumption in hourly intervals for a rolling total of 96 days. This is equal to 2,304 hourly intervals of consumption. The data logging data is extracted through radio frequency (RF) activation. The RF activation allows the utility workers to visit the location and extract the data without physically interacting with the meter itself. This limits worker exposure to animals, or other dangerous situations.

The extraction process takes about 30 seconds. The activation is done through the Hand-Held Unit (HHU) connected to the R900 BCT via Bluetooth®. The R900 BCT sends the activation signal to the R900 MIU, which sends the data intervals to the R900 BCT. The HHU saves the data.

Pairing with the Belt Clip Transceiver (BCT)

To pair a BCT, complete the following steps.

1. Change the date if you have a specific day to target.
2. Click INITALIZE to pair with the R900 BCT.
3. Type the MIU ID.
4. Click CAPTURE.

   The system transmits reads like the data logger reads. The data logger has 96 days of hourly reads and off cycle has 96 days of daily reads.

Accessing Data Logging

Complete the following steps to log the data.

1. On the host software home screen on the HHU, click MENU.

Figure 39 – HHU Home Screen

2. On the HHU Menu screen, click UTILS (option 4).

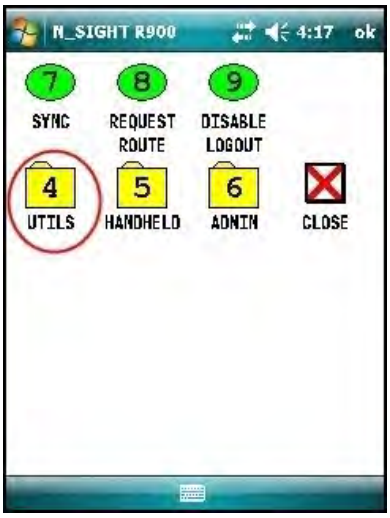

Figure 40 – N_SIGHT® R900® Menu Screen

3. Click **DATA LOGGER** (option 9).

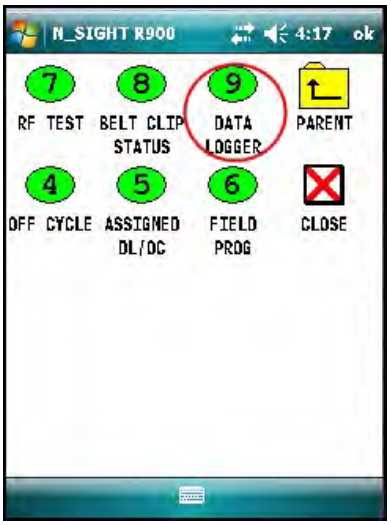

Figure 41 – Data Logger Option

4. Type your reader ID and password for the host software, and then click **LOGIN**.

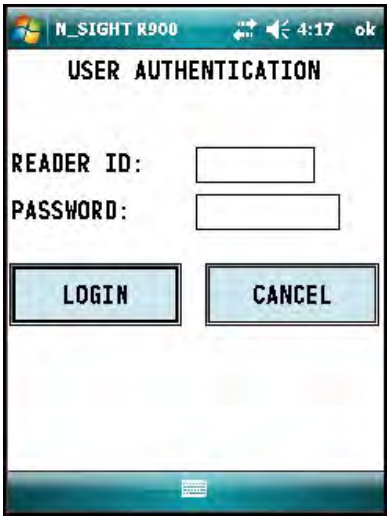

Figure 42 – Reader ID Input

Initializing the Data Logger

You must initialize the R900 BCT each time you attempt to data log.

1. Verify the time is correct, and then click **YES**.

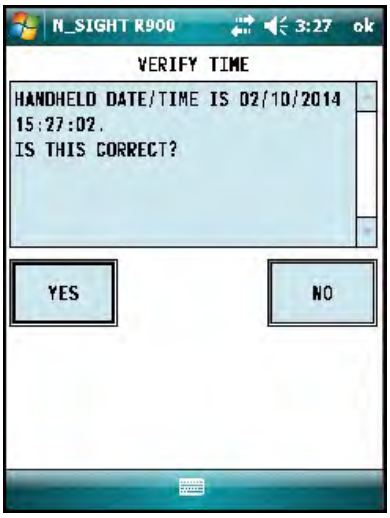

Figure 43 – HHU Time Confirmation

The HHU must be synchronized prior to data logging, to set the clock.

2. The Initialize Device screen appears if you are not connected or you are not in range of your R900 BCT. Click **INITIALIZE**.

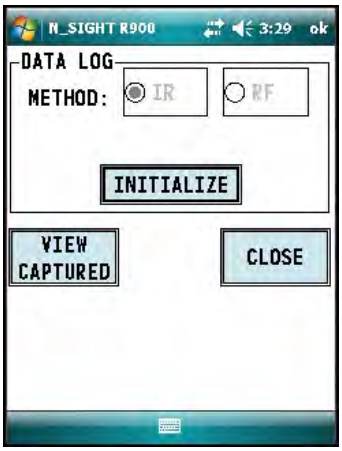

Figure 44 – Initialize RF Device

3. Select **RF**, and then type the MIU ID. You can type the MIU ID using the number pad keys or expand the on-screen keyboard.

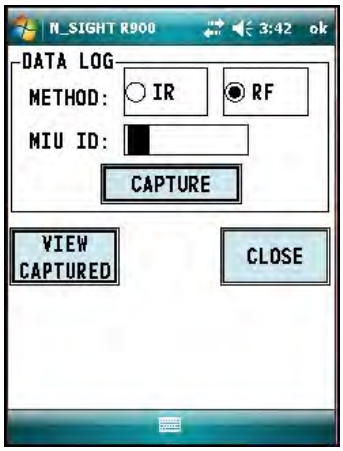

Figure 45 – MIU ID Entry

4. After you type the MIU ID, click **CAPTURE**.

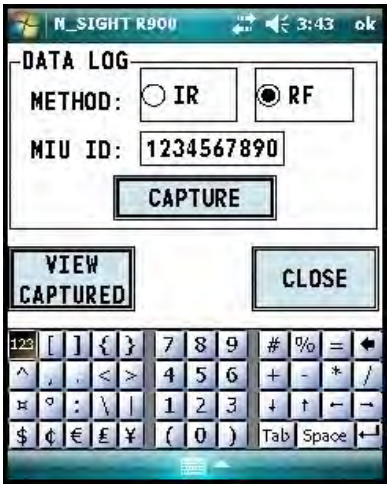

Figure 46 – Capture Button

5. You are prompted to provide the meter size and unit of measure. Type this information now, and then click **OK** , or after the data logging has completed.

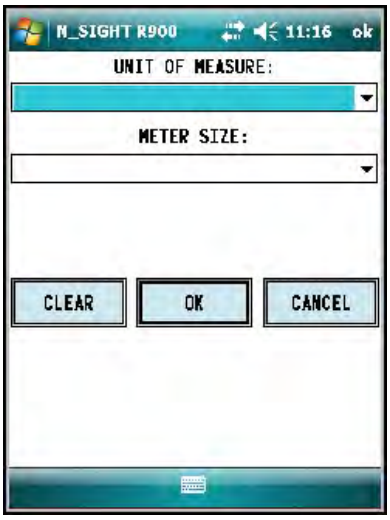

Figure 47 – Meter Size Selection

Initiating RF-Activated Data Logging

Follow this procedure to initiate RF-activated data logging.

1. Click **START** to initiate the data logging.

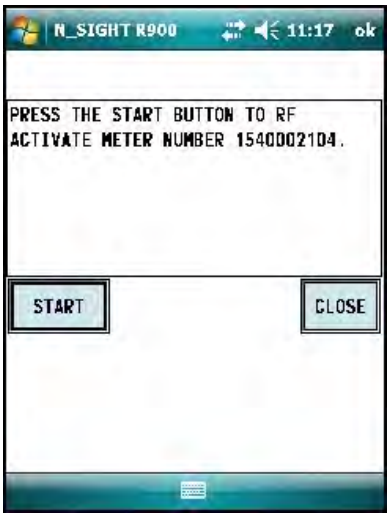

Figure 48 – Start Button

The R900 BCT activates the R900 and listens for the data logger to start transmitting.

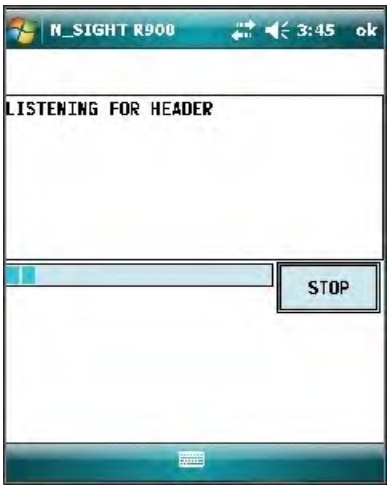

Figure 49 – Listening for Data

The data appears on the screen.

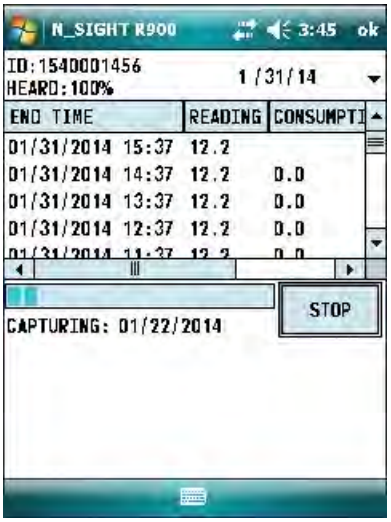

Figure 50 – Receiving Data

2. After the data logging process is completed, choose the meter size. See step 5 under Initializing the Data Logger.
3. Click GRAPH to display the data in a graph. See "Sample Data Logging Graph " on the next page for more information.

The HHU processes and saves the data. After closing the data logging screen, the unit performs a backup.

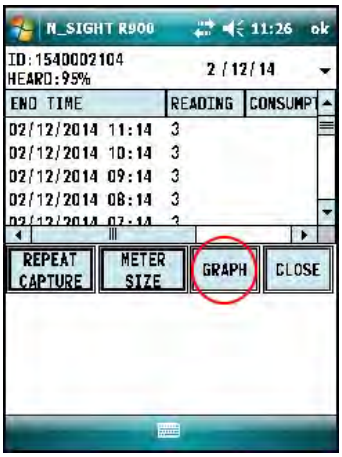

Figure 51 – Graph Button

Sample Data Logging Graph

The following are two examples of the graphs the system can produce with data logging.

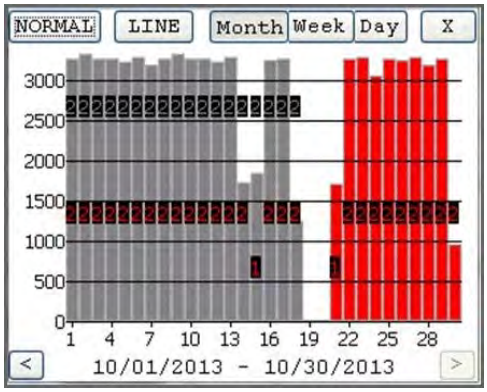

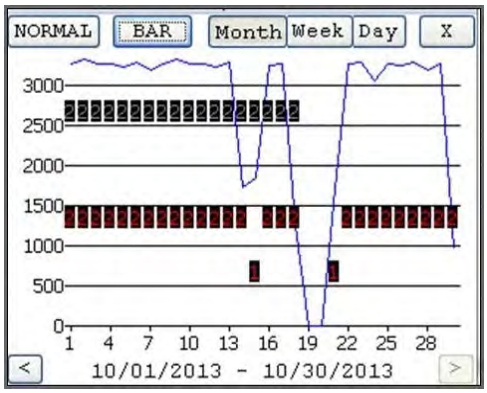

Figure 52 – Data Logging Graph Examples

Table 10 – Data Logging Graph Legend

Color Code	Description
1 red	Intermittent leak
2 red	Continuous leak
1 gray	Minor backflow
2 gray	Major backflow
Blue bars	No flags
Red bars	Leak
Gray bars	Backflow. If the Backflow flag and the Leak flag appear at the same time, Backflow (gray bars) has precedence over Leak.

Off Cycle Data Extraction

Off cycle reads are 96 days of daily reads taken at 15-minute intervals over a 24-hour period. This allows utilities to retrieve move out reads or monitor vacant usage to prevent theft.

To navigate to off cycle, complete the following steps.

1. On the host software home screen on the HHU, click MENU.

Figure 53 – HHU Home Screen

2. On the HHU Menu screen, click **UTILS** (option 4).

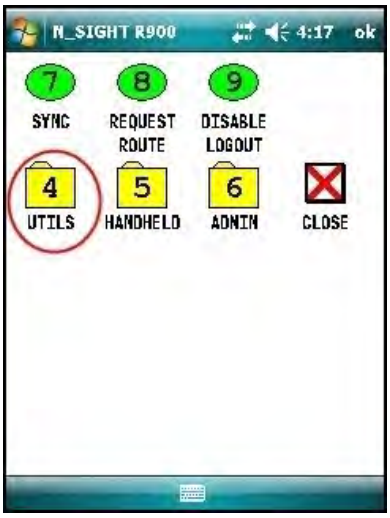

Figure 54 – HHU Menu

3. Click **OFF CYCLE** (option 4).

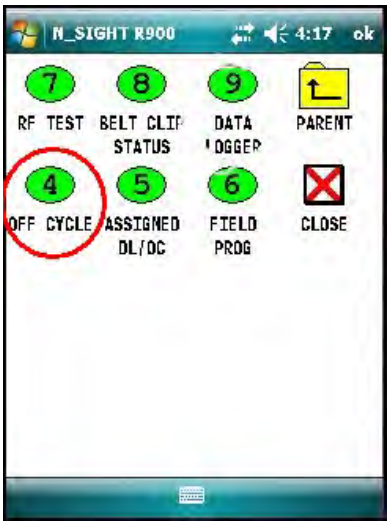

Figure 55 – Off Cycle Option

4. Type the read ID or the password.
5. Click **LOGIN**.
6. Confirm the date and time are correct.
7. Click **YES**.

Chapter 7: Maintenance and Troubleshooting

This chapter defines maintenance and troubleshooting procedures for the R900® MIU.

Six-Wheel Encoder Normal Operation

If the odometer reads 123456, the display shows 1 2 3 4 5 5 0 0.

Note that the sixth digit displayed is a five, if the last digit on the odometer is five through nine. The sixth digit is zero, if the last digit on the odometer is zero through four. The R900 MIU adds two zeros on the end to provide an eight-digit reading to the host software.

Four-Wheel Encoder Normal Operation

If the odometer reads 123456, the display shows 1 2 3 4 0 0 0 0.

The E-CODER®)R900*i*™ adds four zeros on the end to provide an eight-digit reading to the host software.

Troubleshooting

This section provides examples of possible reading values and what they indicate.

Table 11 – Example Reading Values

Reading Value	Definition	Troubleshooting
::::::::	Failure to retrieve reading	• Usually indicates a cut wire. Check the connection between the register and MIU. • If using a non-autodetect ProRead™ register, verify that it is programmed for three-wire mode.
????????	Indicates an ambiguous, bad read, replaces ------- and HHHHHHHH	N/A
MMMMMMMM	Indicates an out-of-range reading (>99999999), diagnostic code from the MIU	• Indicates that no meter reading history is available. • Swipe the MIU with a magnet to force the MIU to read the register.
UUUUUUUU	Indicates undefined out of range reading, corrupt valve	N/A

Replacement Parts

The following table lists the available replacement parts for the R900 MIU.

Table 12 – Available Replacement Parts

Part Name	Part Number
Solid three-conductor wire, 22 AWG (1000 ft.)	6431-352
Dow Corning #4 compound (5.3 oz. tube)	96018-064
GE Novaguard (4 cc packet)	96018-072
Scotchloks	8138-125
Mounting Adapter for ProRead Register	12539-001
Mounting Bracket for E-CODER Register	13443-000
Fastener Screw	8328-302
Magnet	12287-001
Flat Washers	8340-054

Contact Information

Within North America, Neptune Customer Support is available Monday through Friday, 7:00 A.M. to 5:00 P.M. Central Standard Time, by telephone, email, or fax.

By Phone

To contact Neptune Customer Support by phone, complete the following steps.

1. Call **(800) 647-4832**.
2. Select one of the following options:
   - **1** if you have a Technical Support Personal Identification Number (PIN)
   - **2** if you do not have a Technical Support PIN
3. Enter the six-digit PIN and press #.
4. Select one of the following options.
   - **2** for Technical Support
   - **3** for maintenance contracts or renewals
   - **4** for Return Material Authorization (RMA) for Canadian Accounts

You are directed to the appropriate team of Customer Support Specialists. The specialists are dedicated to you until the issue is resolved to your satisfaction. When you call, be prepared to give the following information:

- Your name and utility or company name
- A description of what occurred and what you were doing at the time
- A description of any actions taken to correct the issue

By Fax

To contact Neptune Customer Support by fax, send a description of your problem to (334) 283-7497. Please include on the fax cover sheet the best time of day for a customer support specialist to contact you.

By Email

To contact Neptune Support by email send your message to support@neptunetg.com.

This page intentionally left blank.

Glossary

A

antenna

The MIU antenna used for pit installations.

F

FCC

Federal Communications Commission

M

main housing

The main body of the MIU that attaches to the mounting adapter.

main housing fastener screw

The set screw (Hi-Lo fastener) that holds the main housing to the mounting adapter.

maximum cable lengths

The length set by the manufacturer for the wire between the encoder and the remote receptacle. The specifications for this length are based on a solid 3-conductor wire.

MIU

Meter Interface Unit

mounting adapter

The back plate of the MIU that is attached to the wall

S

seal wire

The wire inserted into the seal holes adjacent to the main housing fastener screw. This seal must be broken to remove the main housing from the mounting adapter.

strain relief posts

The Posts located on the encoder register and the back of the main MIU housing

T

terminal screw cover

The plastic cover on the encoder register that protects the terminal screws and exposed wires

terminal screws

The screws on the encoder register face that are used to connect and anchor the three (3) conductor wire to the register

A

activating

MIU 33

B

BCT

pairing 37

belt clip transceiver

pairing 37

C

cable

maximum lengths 4

typing 33

conditions 4

connecting

splice tube 32

contact information 48

customer support 48

D

data logger

initializing 40

data logging 38

initiating RF-activated 42

dimensions and weight

pit MIU 5

wall MIU 7

E

E-CODER®)R900™*i*

install inside version 23

electrical specifications 3

encoder 47

four-wheel 47

encoder register

interface 4

verifying and preparing 10

environmental conditions

Pit MIU 4

Wall MIU 6

I

initializing

data logger 40

installation

testing 21, 35

installing

antenna 26

pit MIU 28

wall MIU 17

L

logging data 38

M

maximum cable lengths 4

MIU

activating 33

R900® Wall and Pit 1

MIU ID number 10

O

Off Cycle Data Extraction 45

P

pairing

belt clip transceiver 37

product description 1

R

R900® MIU

programming 2

register

install 11

S

safety and preliminary checks 10

Scotchlok™ connectors 18, 29

site selection 16, 24

specifications

electrical 3

functional for pit MIU 5

functional for wall MIU 6

R900® Wall MIU 6

transmitter 3

storage 15, 23

T

testing 21

tools and materials 9, 15, 23

transmitter specifications 3

troubleshooting 47

U

unpacking 15, 23

Neptune Technology Group Inc.
1600 Alabama Highway 229
Tallassee, AL 36078
USA Tel: (800) 633-8754
Fax: (334) 283-7293

Neptune Technology Group
(Canada) Ltd.
7275 West Credit Avenue
Mississauga, Ontario L5N 5M9
Canada Tel: (905) 858-4211
Fax: (905) 858-0428

Neptune Technology Group Inc.
Avenida Ejercito Nacional No 418
Piso 12, Despacho 1203
Colonia Polanco V Sección
C.P. 11560 Delegación, Miguel Hidalgo
Mexico D.F.
Tel: (55) 5203-5708, (55) 5203-4032,
(55) 5203-5294

Online
www.neptunetg.com

Accu-Flo
1-800-921-2228
www.accuflo.com

IM R900® MIU 01.19 Part No. 12560-001 © Copyright 2006-2019, Neptune Technology Group Inc. Neptune is a registered trademark of Neptune Technology Group Inc.