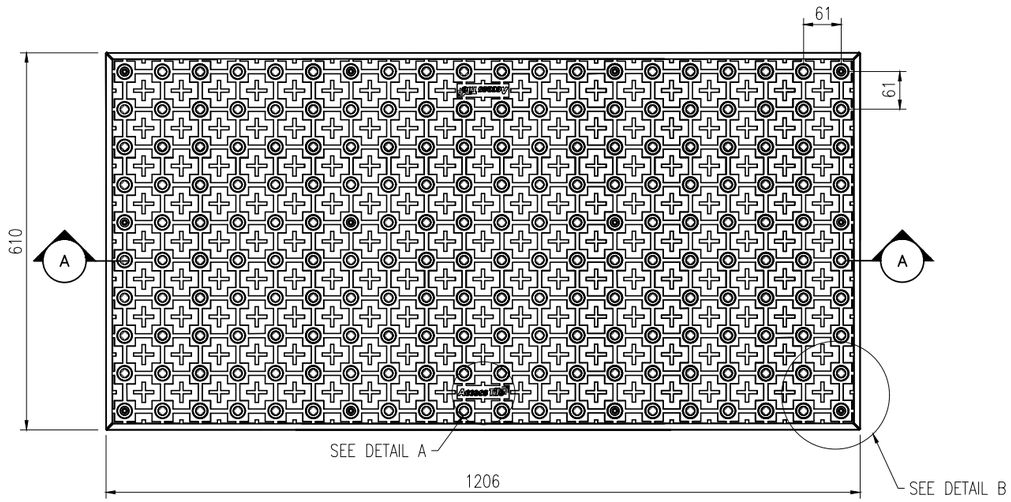

PLAN VIEW
SCALE: 1:10

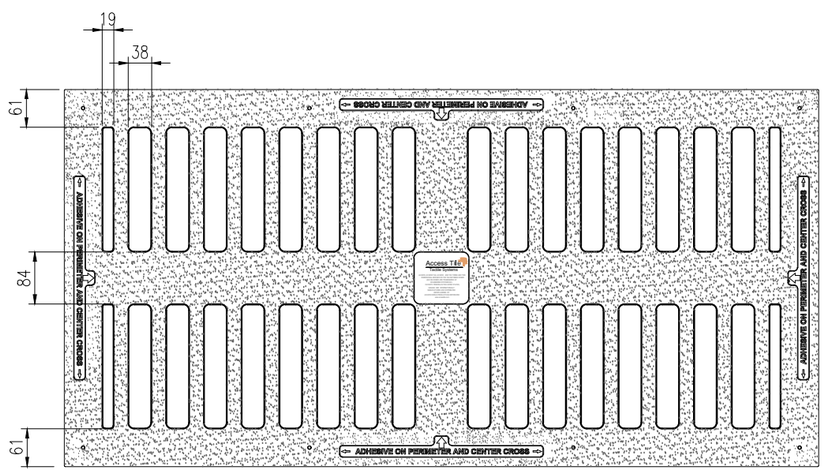

UNDERSIDE VIEW
SCALE: 1:10

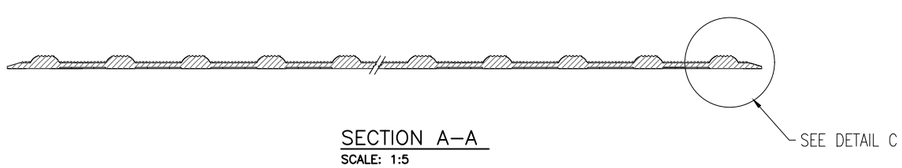

SECTION A–A
SCALE: 1:5

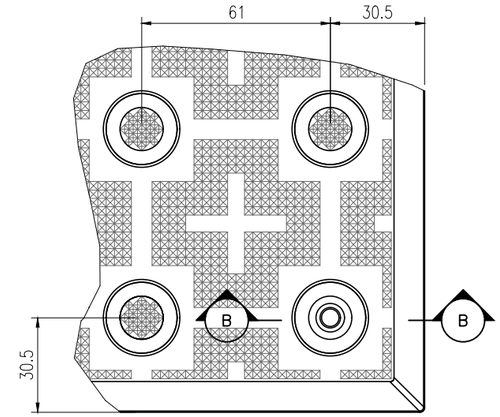

DETAIL B
SCALE: 1:2

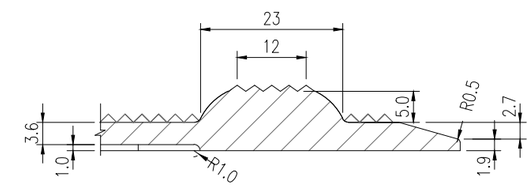

DETAIL C
SCALE: 1:1

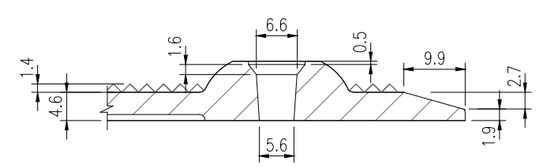

SECTION B–B
SCALE: 1:1

DETAIL A
SCALE: 1:1

KINESIK
ENGINEERED PRODUCTS
www.kinesik.ca

© KINESIK ENGINEERED PRODUCTS

ACCESS, ACCESS TILE, ACCESS + AND THE TWO AND THREE DIMENSIONAL DESIGNS ON THE DOMES ARE TRADEMARKS OF ENGINEERED SYSTEMS INC.
PATENTS PENDING IN THE USA, CANADA AND INTERNATIONALLY. DISTRIBUTED UNDER LICENSE BY KINESIK ENGINEERED PRODUCTS.

© KENNETH E. SZEKELY

MATERIAL LIST

ITEM	DESCRIPTION	PART NO.	QTY
1	ACCESS TILE	ACC–S–2448–FR	1
2	TeK™ ANCHOR	ACC–S–ANCH	8
3	TACTILE BOND AND SEAL	TBS–010	1 ea

REFERENCE DRAWINGS

DWG. NO.	DESCRIPTION

No.	DATE	REVISION	APPR.

SCALE: AS NOTED

DESIGNED: KES	DATE: 12/06/2018
DRAWN: M.T.	12/06/2018
DRAWN: KES	
PROJECT MANAGER	
TRADE: TWSI	PART NO.: ACC–S–2448–FR

MATERIAL: POLYMER COMPOSITE

SUBJECT: Access Tile FR
TRUNCATED DOME, TACTILE WALKING SURFACE INDICATOR TILE

PROJECT: *FR*
TRUNCATED DOME, TACTILE WALKING SURFACE INDICATOR 610 x 1206
SURFACE APPLIED
INLINE DOME TILE DRAWING

DRAWING NO.	REV. NO.
ACC-S-2448-FR	0

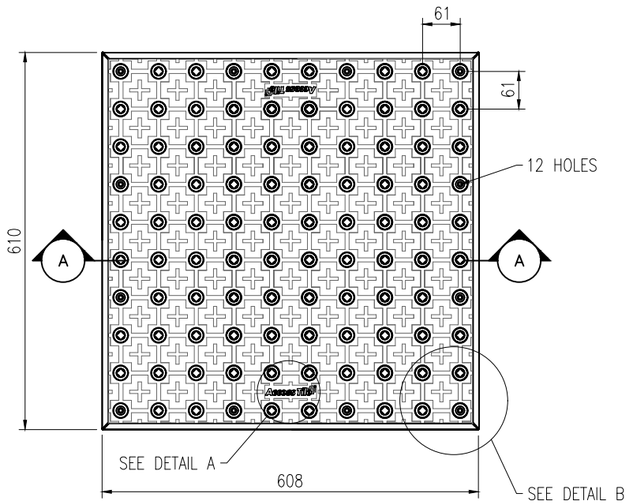

PLAN VIEW
SCALE: 1:10

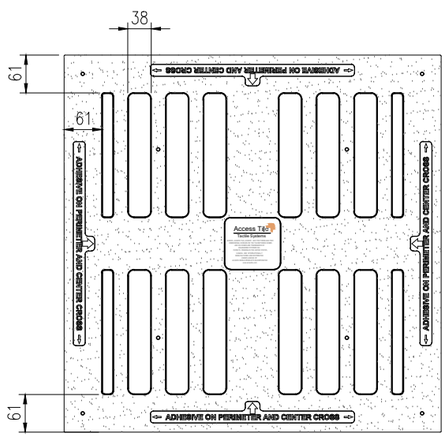

UNDERSIDE VIEW
SCALE: 1:10

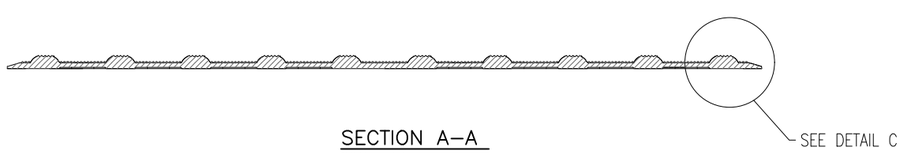

SECTION A–A
SCALE: 1:5

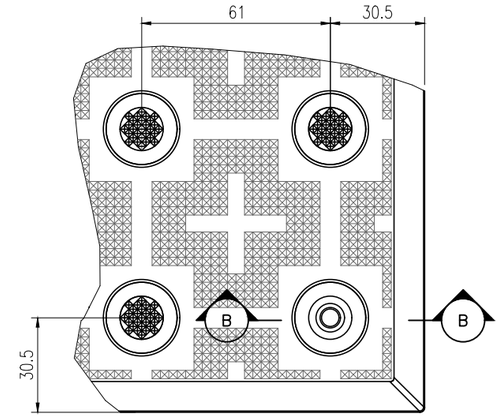

DETAIL B
SCALE: 1:2

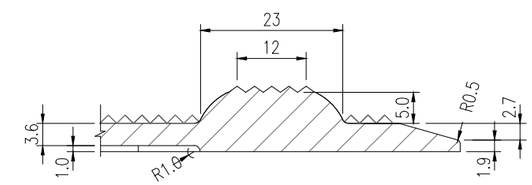

DETAIL C
SCALE: 1:1

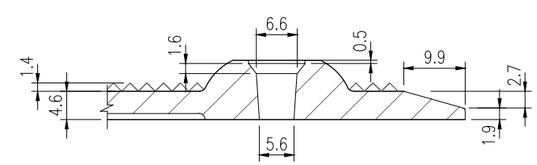

SECTION B–B
SCALE: 1:1

DETAIL A
SCALE: 1:1

KINESIK®
ENGINEERED PRODUCTS
www.kinesik.ca

© KINESIK ENGINEERED PRODUCTS

ACCESS, ACCESS TILE, ACCESS + AND THE TWO AND THREE DIMENSIONAL DESIGNS ON THE DOMES ARE TRADEMARKS OF ENGINEERED SYSTEMS INC.
PATENTS PENDING IN THE USA, CANADA AND INTERNATIONALLY. DISTRIBUTED UNDER LICENSE BY KINESIK ENGINEERED PRODUCTS.

© KENNETH E. SZEKELY

MATERIAL LIST

ITEM	DESCRIPTION	PART NO.	QTY
1	ACCESS TILE	ACC–S–2424–FR	1
2	TeK™ ANCHOR	ACC–S–ANCH	12
3	TACTILE BOND AND SEAL	TBS–010	1 ea

REFERENCE DRAWINGS

DWG. NO.	DESCRIPTION

No.	DATE	REVISION	APPR.

SCALE: AS NOTED

DESIGNED	KES	DATE	12/06/2018
DRAWN	M.T.		12/06/2018
DRAWN	KES		
PROJECT MANAGER			
TRADE	TWSI	PART NO.	ACC–S–2424–FR
MATERIAL	POLYMER COMPOSITE		

SUBJECT
AccessTile+® FR
TRUNCATED DOME, TACTILE WALKING SURFACE INDICATOR TILE

PROJECT
FR
TRUNCATED DOME, TACTILE WALKING SURFACE INDICATOR 610 x 610
SURFACE APPLIED
INLINE DOME TILE DRAWING

DRAWING NO.	REV. NO.
ACC-S-2424-FR	0

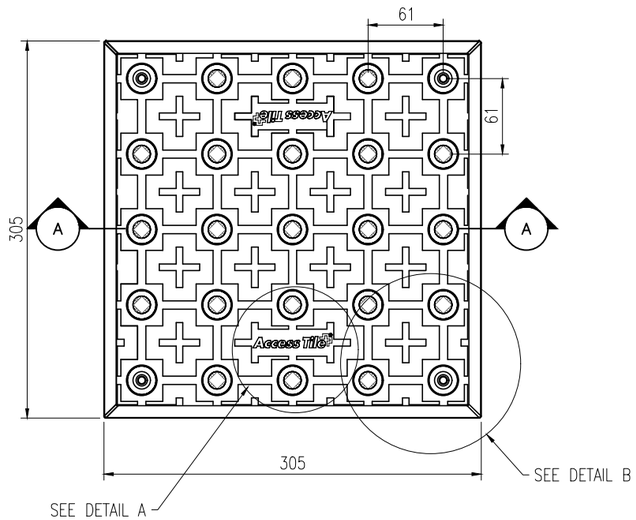

PLAN VIEW
SCALE: 1:5

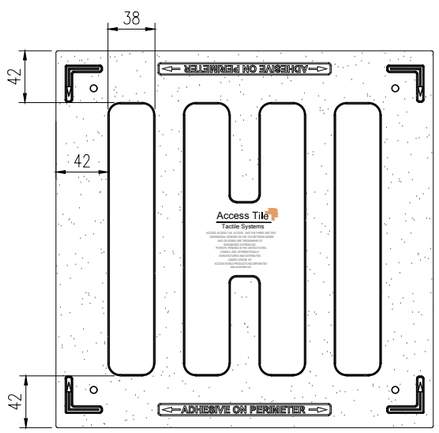

UNDERSIDE VIEW
SCALE: 1:5

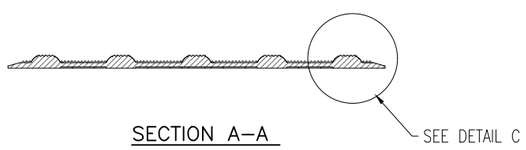

SECTION A–A
SCALE: 1:5

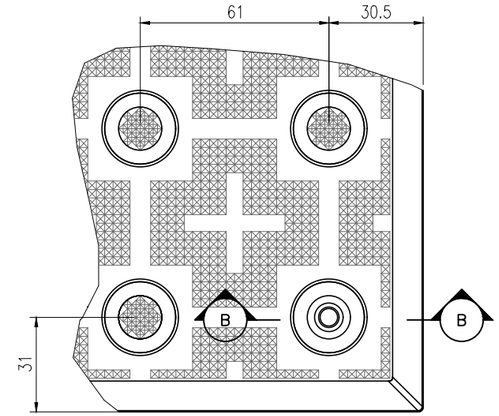

DETAIL B
SCALE: 1:2

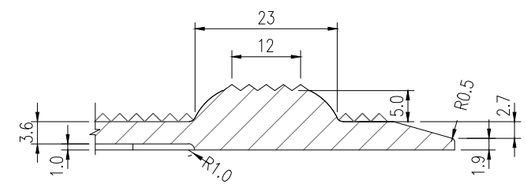

DETAIL C
SCALE: 1:1

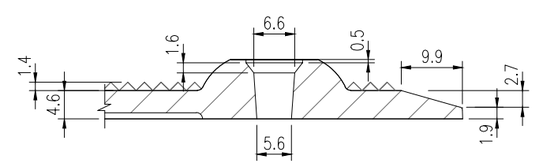

SECTION B–B
SCALE: 1:1

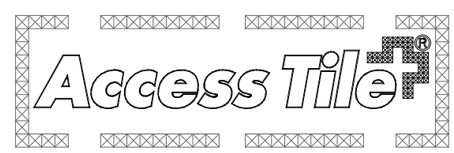

DETAIL A
SCALE: 1:1

KINESIK®

ENGINEERED PRODUCTS

www.kinesik.ca

© KINESIK ENGINEERED PRODUCTS

ACCESS, ACCESS TILE, ACCESS + AND THE TWO AND THREE DIMENSIONAL DESIGNS ON THE DOMES ARE TRADEMARKS OF ENGINEERED SYSTEMS INC.
PATENTS PENDING IN THE USA, CANADA AND INTERNATIONALLY. DISTRIBUTED UNDER LICENSE BY KINESIK ENGINEERED PRODUCTS.

© KENNETH E. SZEKELY

MATERIAL LIST

ITEM	DESCRIPTION	PART NO.	QTY
1	ACCESS TILE	ACC–S–1212–FR	1
2	TeK™ ANCHOR	ACC–S–ANCH	4
3	TACTILE BOND AND SEAL	TBS–010	1 ea

REFERENCE DRAWINGS

DWG. NO.	DESCRIPTION

No.	DATE	REVISION	APPR.

SCALE: AS NOTED

DESIGNED: KES	DATE: 12/06/2018
DRAWN: RWO	12/06/2018
DRAWN: KES	
PROJECT MANAGER	
TRADE: TWSI	PART NO.: ACC–S–1212–FR
MATERIAL: POLYMER COMPOSITE	

SUBJECT

Access Tile® FR
TRUNCATED DOME, TACTILE WALKING SURFACE INDICATOR TILE

PROJECT

FR
TRUNCATED DOME, TACTILE WALKING SURFACE INDICATOR 305 x 305 SURFACE APPLIED INLINE DOME TILE DRAWING

DRAWING NO.	REV. NO.
ACC-S-1212-FR	0

Accu-Flo 1-800-921-2228
www.accuflo.com